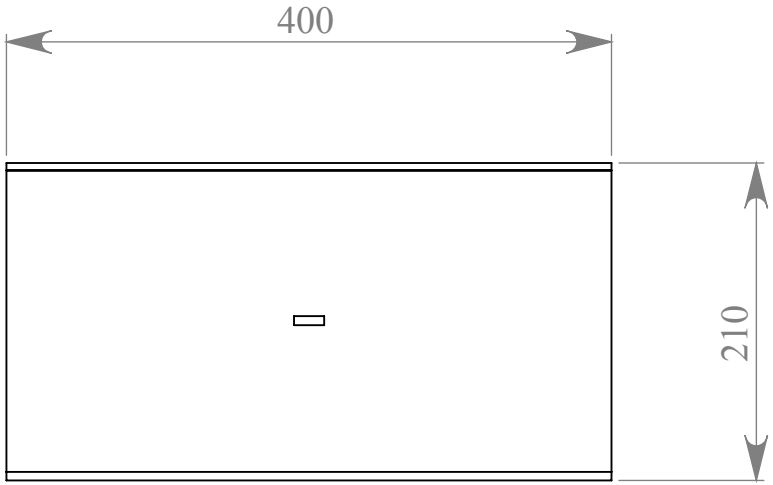

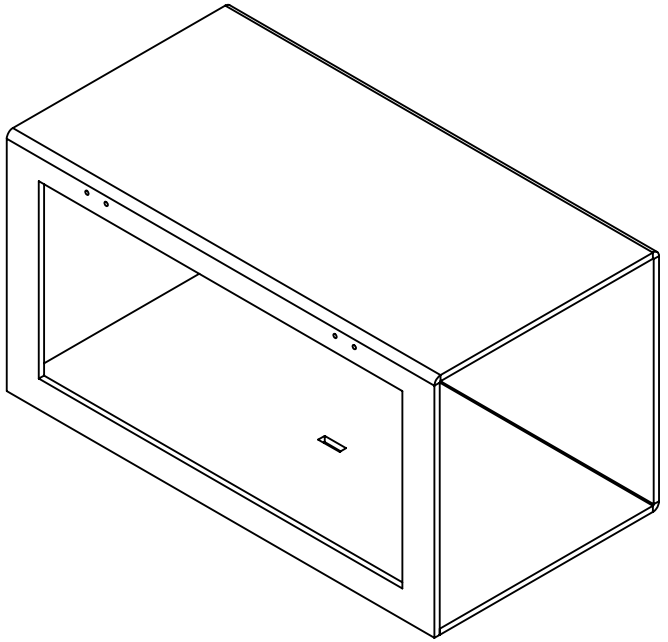

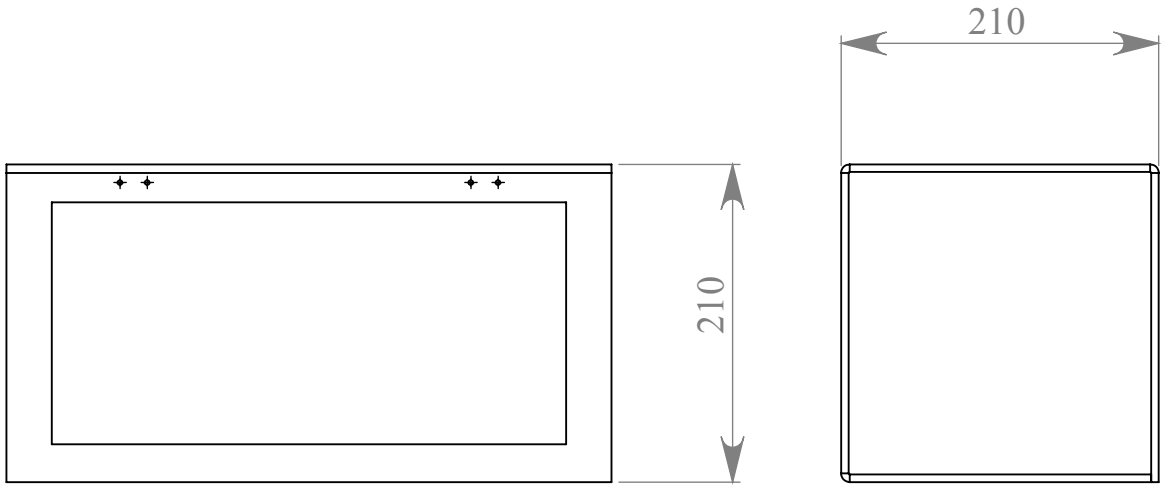

DO NOT SCALE DRAWING	REVISION
TITLE: Measuring section	
DWG NO. by ICM	A4
SCALE:1:10	SHEET 1 OF 1

WEIGHT: